Work Order ID 66227

February 8, 2011 8:42:59 AM

Item ID: D3911-7 **Accept** **Setup Start**

Revision ID: **Stop**

Item Name: Basket Plate-Eyebolt Receiver

Start Date: 2/08/11 **Start Qty:** 8.00 **Cust Item ID:**

Required Date: 2/22/11 **Req'd Qty:** 8.00 **Customer:**

Reference:

Run Start

Approvals: **Process Plan:** CL **Date:** 11/02/08 **Tooling:** _____ **Date:** _____

Stop

QC: _____ **Date:** _____ **SPC (Y/N):** _____ **Date:** _____

Sequence ID/ Work Center ID	Operation Description	Set Up/ Run Hours	Tool ID	Tool #	Plan Code	Accept Qty	Reject Qty	Reject Number	Insp. Stamp
Draw Nbr / **Revision Nbr**									
D3911 / D									Pro →
100		0.00							
Waterjet	**Memo**	0.00				BI1-2-14			
FLOW CNC Waterjet 304 . 125	Cut as per Dwg and File DWG REV: P PROG REV: D							(10)	
	DEBURR								
110	QC2- Inspect parts off machine FAI/FAIB	0.00							
QC	**Memo**	0.00				BI1-2-14			
Quality Control									

Dart Aerospace Ltd

W/O: 66227		WORK ORDER CHANGES					
DATE	STEP	Perm. change PROCEDURE CHANGE	By	Date	Qty	Approval Chief Eng / Prod Mgr	Approval QC Inspector
Mar 15	# 100	change Rev on FAI sheet to Rev D. For Kevin to change only					11/02/15

Part No: D3911-7 PAR #: _____ Fault Category: _____ NCR: Yes No DQA: _____ Date: _____

Resolution: _____ Disposition: _____ QA: N/C Closed: _____ Date: _____

NCR:		WORK ORDER NON-CONFORMANCE (NCR)						
DATE	STEP	Description of NC Section A	Corrective Action Section B			Verification Section C	Approval Chief Eng	Approval QC Inspector
			Initial Chief Eng	Action Description Chief Eng	Sign & Date			

NOTE: Date & initial all entries

H:\FORMS\Quality Assurance\approved QA\NCRWO RevE

Work Order ID 66227

February 8, 2011 8:42:59 AM

Item ID: D3911-7 **Accept** **Setup Start** **Stop**

Revision ID:

Item Name: Basket Plate-Eyebolt Receiver

Start Date: 2/08/11 **Start Qty:** 8.00 **Cust Item ID:**

Required Date: 2/22/11 **Req'd Qty:** 8.00 **Customer:**

Reference:

Run Start **Stop**

Approvals: **Process Plan:** _____ **Date:** _____ **Tooling:** _____ **Date:** _____

QC: _____ **Date:** _____ **SPC (Y/N):** _____ **Date:** _____

Sequence ID/ Work Center ID	Operation Description	Set Up/ Run Hours	Tool ID	Tool #	Plan Code	Accept Qty	Reject Qty	Reject Number	Insp. Stamp
120	QC8- Inspect parts - second check	0.00				(K9)			Pto →
QC	Memo	0.00							
Quality Control									
130	Identify as per dwg & Stock Location	0.00							
Packaging	Memo	0.00							
Packaging									
140	QC21- Final Inspection - Work Order Release	0.00							
QC	Memo	0.00							
Quality Control									

8/11/02/15

Pt/2/15 (9)

CK 11/02/16

MF

11-02-15

Dart Aerospace Ltd

W/O:		WORK ORDER CHANGES					
DATE	STEP	PROCEDURE CHANGE	By	Date	Qty	Approval Chief Eng / Prod Mgr	Approval QC Inspector
11/02/15	#120	took qty 1 for dc template to Replace Rev c template. Scrap D3911-7 B57838 Rev c	S	11/02/15	(6T)		S 11/02/15

Part No: _____ **PAR #:** _____ **Fault Category:** _____ **NCR:** Yes No **DQA:** _____ **Date:** _____

Resolution: _____ **Disposition:** _____ **QA: N/C Closed:** _____ **Date:** _____

NCR:		WORK ORDER NON-CONFORMANCE (NCR)						
DATE	STEP	Description of NC Section A	Corrective Action Section B			Verification Section C	Approval Chief Eng	Approval QC Inspector
			Initial Chief Eng	Action Description Chief Eng	Sign & Date			

NOTE: Date & initial all entries

H:\FORMS\Quality Assurance\approved QA\NCRWO RevE

Picklist Print

February 8, 2011 8:42:59 AM

Work Order ID: 66227

Parent Item: D3911-7

Parent Item Name: Basket Plate-Eyebolt Receiver

Start Date: 2/08/11 **Required Date:** 2/22/11

Start Qty: 8.00 **Required Qty:** 8.00

Comments: IPP REV:A NEW ISSUE JLM 10-02-09 VERIFIED BY:EC IPP
REV:B AS PER REV B 10-03-23 JLM VERIFIED BY:DD

Component Item ID/ Item Name	Replacement Item ID	Mfg/ Purch	Bin Item	Primary Location	Last Location	Route Seq ID	Unit of Measure	Qty on Hand	Qty per Kit	Total Qty	Qty Issued	Date Issued	Status
M304S11GA 304/316 0.125 Sheet		Purchased	No			100	sf	52.2800	0.0319	0.268632	.5		

1B 11-2-14

Location	Loc Qty	Loc Code
MAT	52.28	
116623	52.28	

116623

(11)

Dart Aerospace Ltd

W/O:		WORK ORDER CHANGES					
DATE	STEP	PROCEDURE CHANGE	By	Date	Qty	Approval Chief Eng / Prod Mgr	Approval QC Inspector

Part No: _____ **PAR #:** _____ **Fault Category:** _____ **NCR:** Yes No **DQA:** _____ **Date:** _____

Resolution: _____ **Disposition:** _____ **QA: N/C Closed:** _____ **Date:** _____

NCR:		WORK ORDER NON-CONFORMANCE (NCR)						
DATE	STEP	Description of NC Section A	Corrective Action Section B			Verification Section C	Approval Chief Eng	Approval QC Inspector
			Initial Chief Eng	Action Description Chief Eng	Sign & Date			

NOTE: Date & initial all entries

H:\FORMS\Quality Assurance\approved QA\NCRWO RevE

ITEM	QTY -041	QTY -043	P/N	DESCRIPTION
	X		D3911-041	BASKET INSTL STUD ASSY (LOWER)
		X	D3911-043	AFT EYEBOLT RECEIVER ASSY
1	1		D3911-1	BASKET INSTL STUD (LOWER)
2		1	D3911-3	AFT EYEBOLT RECEIVER
3	2		D3911-5	BASKET STUD PLATE
4		2	D3911-7	BASKET PLATE-EYEBOLT RECEIVER
5	3	4	MS20615-4M20	RIVET

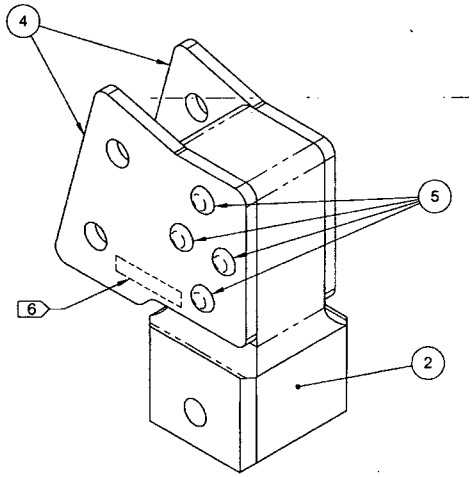

D3911-043 AFT EYEBOLT RECEIVER ASSY

SHOP COPY
RETURN TO
ENGINEERING
UNCONTROLLED COPY
SUBJECT TO AMENDMENT
WITHOUT NOTICE
WORK ORDER
NO. 66227
CL 11/02/08

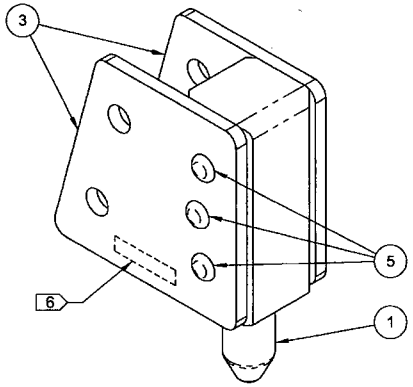

D3911-041 BASKET INSTL STUD ASSY (LOWER)

RELEASED
2010 -08- 04

NOTES:
1) MATERIAL: N/A
2) FINISH: NONE
3) TOLERANCES: PER DART QSI 018 UNLESS OTHERWISE NOTED
4) UNITS: INCHES UNLESS OTHERWISE NOTED
5) BREAK SHARP EDGES: 0.005 TO 0.010 MAX
6) IDENTIFICATION: IDENTIFY WITH DART P/N D3911-04X USING FINE POINT PERMANENT INK MARKER
7) WEIGHT -041: 0.63 lbs
-043: 0.99 lbs

REV.	DESCRIPTION	BY	DATE
D	0.825 +0.000/-0.010 WAS 0.65 (B1-2).	MB	10.06.22
C	BOM: QTY (2): D4087-1 & MS21209-C610 REMOVED FROM -043 ASSY. WEIGHT UPDATED. D3911-3 REDESIGNED. D3911-043 & D3911-3 DETAIL UPDATED. MTL SPEC ADDED TO NOTES (SHT 2). DIM 0.375 WAS 0.400 (C3-3).	JPH	10.04.06
B	DIAMETER (B3-2) AND DIM ADDED (B2-2) & (C3-2)	JPH	10.03.16
A	NEW ISSUE	JPH	10.03.04

DESIGN	JPH	DART AEROSPACE LTD HAWKESBURY, ONTARIO, CANADA	
DRAWN			
CHECKED		DRAWING NO. D3911	REV. D
MFG. APPR.			SHEET 1 OF 3
APPROVED		TITLE AFT HARDPOINT, BASKET	SCALE NTS
DE APPR.			
DATE	10.06.22		

COPYRIGHT © 2010 BY DART AEROSPACE LTD
THIS DOCUMENT IS PRIVATE AND CONFIDENTIAL AND IS SUPPLIED ON THE EXPRESS CONDITION THAT IT IS NOT TO BE USED FOR ANY PURPOSE OR COPIED OR COMMUNICATED TO ANY OTHER PERSON WITHOUT WRITTEN PERMISSION FROM DART AEROSPACE LTD

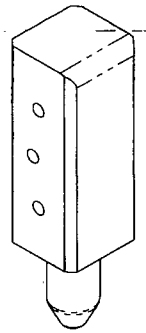

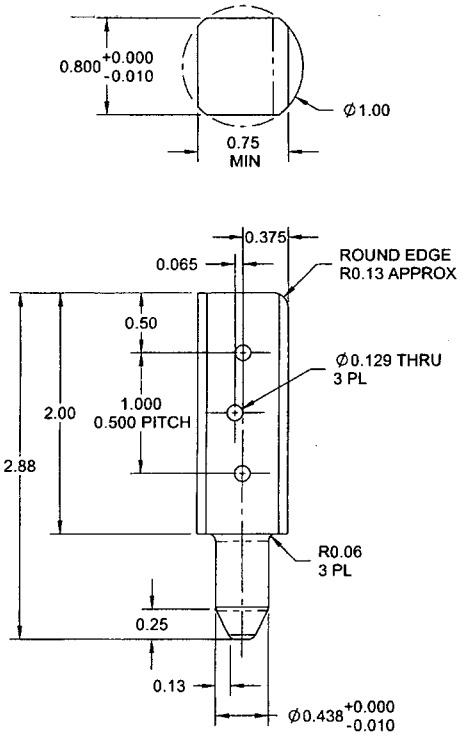

D3911-1 BASKET INSTL STUD (LOWER)

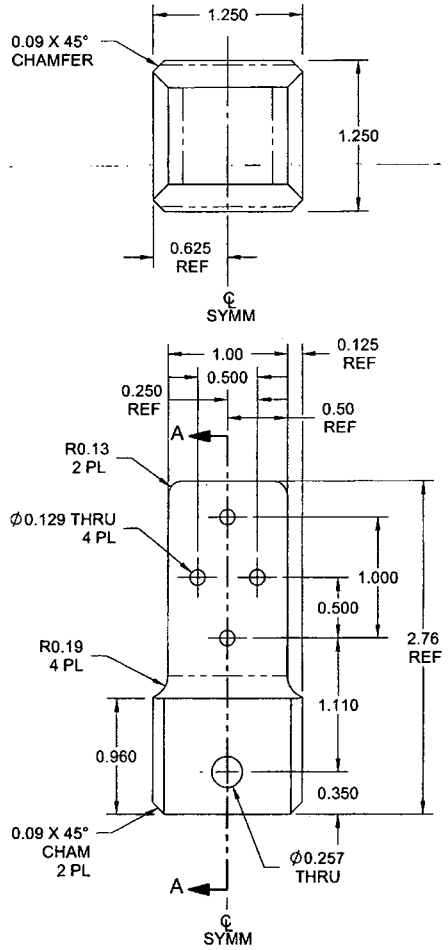

D3911-3 AFT EYEBOLT RECEIVER

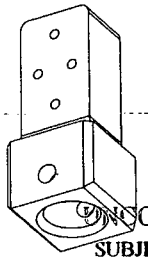

SHOP COPY
RETURN TO
ENGINEERING
CONTROLLED COPY
SUBJECT TO AMENDMENT
WITHOUT NOTICE
WORK ORDER
NO. 06227

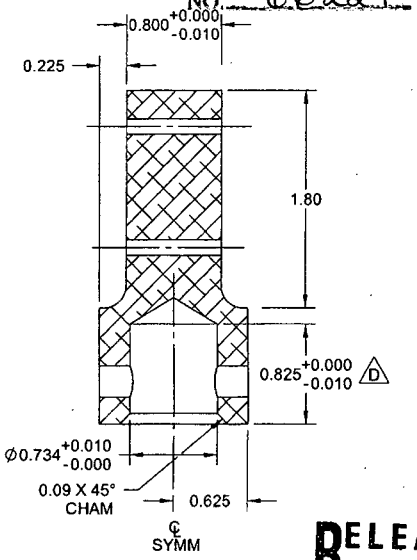

SECTION A-A

RELEASED
2010-08-04

NOTES:
1) MATERIAL -1: 303/304/316 STAINLESS STEEL ROUND BAR, PER ASTM A276 OR ASTM A582 PER DART SPEC M303R OR M304R
-3: 303/304/316 STAINLESS STEEL BAR, PER ASTM A276 OR ASTM A582 PER DART SPEC M303B OR M304B
2) FINISH: NONE
3) TOLERANCES: PER DART QSI 018 UNLESS OTHERWISE NOTED
4) UNITS: INCHES UNLESS OTHERWISE NOTED
5) BREAK SHARP EDGES: 0.005 TO 0.010 MAX
6) IDENTIFICATION: IDENTIFY AT ASSEMBLY
7) WEIGHT -1: 0.36 lbs
-3: 0.71 lbs

DESIGN	JPH	DART AEROSPACE LTD HAWKESBURY, ONTARIO, CANADA
DRAWN		
CHECKED		DRAWING NO. D3911 — REV. D — SHEET 2 OF 3
MFG. APPR.		
APPROVED		TITLE: AFT HARDPOINT, BASKET — SCALE: NTS
DE APPR: --		
DATE	10.06.22	

COPYRIGHT © 2010 BY DART AEROSPACE LTD
THIS DOCUMENT IS PRIVATE AND CONFIDENTIAL AND IS SUPPLIED ON THE EXPRESS CONDITION THAT IT IS NOT TO BE USED FOR ANY PURPOSE OR COPIED OR COMMUNICATED TO ANY OTHER PERSON WITHOUT WRITTEN PERMISSION FROM DART AEROSPACE LTD

SHOP COPY
RETURN TO
ENGINEERING
UNCONTROLLED COPY
SUBJECT TO AMENDMENT
WITHOUT NOTICE
WORK ORDER
NO. 606227

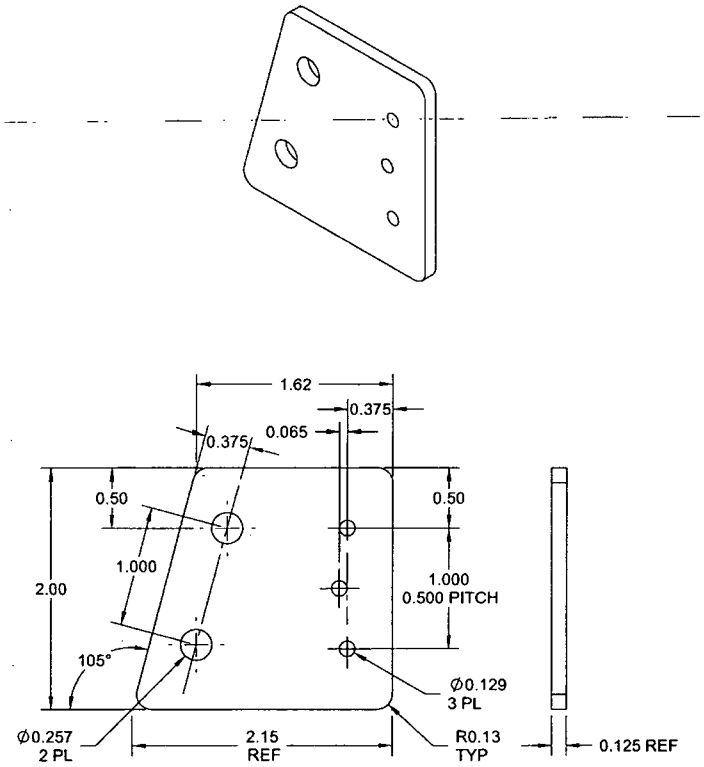

D3911-5 BASKET STUD PLATE

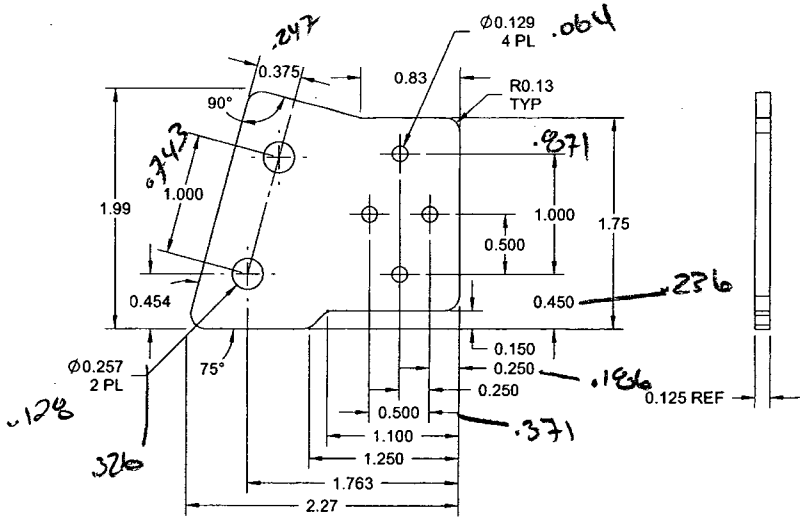

D3911-7 BASKET PLATE-EYEBOLT RECEIVER

RELEASED
2010 -08- 06

NOTES:
1) MATERIAL -5 & -7: 303/304/316 STAINLESS STEEL SHEET ANNEALED 2B, 0.125 THK
PER MIL-S-5059 OR AMS 5513/5524 OR ASTM A240 OR ASME SA240
PER DART SPEC M304S11GA OR M303S11GA
2) FINISH: NONE
3) TOLERANCES: PER DART QSI 018 UNLESS OTHERWISE NOTED
4) UNITS: INCHES UNLESS OTHERWISE NOTED
5) BREAK SHARP EDGES: 0.005 TO 0.010 MAX
6) IDENTIFICATION: IDENTIFY AT ASSEMBLY
7) WEIGHT: -5: 0.13 lbs
-7: 0.13 lbs

DESIGN	JPH	DART AEROSPACE LTD HAWKESBURY, ONTARIO, CANADA
DRAWN		
CHECKED		DRAWING NO. D3911 — REV. D — SHEET 3 OF 3
MFG. APPR.		
APPROVED		TITLE: AFT HARDPOINT, BASKET — SCALE: NTS
DE APPR.		
DATE	10.06.22	

COPYRIGHT © 2010 BY DART AEROSPACE LTD
THIS DOCUMENT IS PRIVATE AND CONFIDENTIAL AND IS SUPPLIED ON THE EXPRESS CONDITION THAT IT IS NOT TO BE USED FOR ANY PURPOSE OR COPIED OR COMMUNICATED TO ANY OTHER PERSON WITHOUT WRITTEN PERMISSION FROM DART AEROSPACE LTD.

DART AEROSPACE LTD	Work Order:	66227
Description: Basket Plate Eyebolt Receiver	Part Number:	D3911-7
Inspection Dwg: D3911 Rev: E		Page 1 of 1

FIRST ARTICLE INSPECTION CHECKLIST

Drawing Dimension	Tolerance	Actual Dimension	Accept	Reject	Method of Inspection	Comments
Ø0.257	+0.006/-0.001	.258	✓		✓ IB 02	
Ø0.129	+0.005/-0.001	.131	✓		✓	
0.375	+/-0.010	.377	✓		✓	
1.000	+/-0.010	1.000	✓		✓	
0.454	+/-0.010	.459	✓		✓	
1.99	+/-0.030	1.99	✓		✓	
0.83	+/-0.030	.83	✓		✓	
1.75	+/-0.030	1.75	✓		✓	
1.000	+/-0.010	1.001	✓		✓	
0.450	+/-0.010	.449	✓		✓	
0.500	+/-0.010	.500	✓		✓	
0.150	+/-0.010	.152	✓		✓	
0.250	+/-0.010	.252	✓		✓	
0.500	+/-0.010	.499	✓		✓	
1.100	+/-0.010	1.100	✓		✓	
1.250	+/-0.010	1.250	✓		✓	
1.763	+/-0.010	1.769	✓		✓	
2.27	+/-0.030	2.27	✓		✓	
0.125	+/-0.010	.121	✓		✓	

Measured by:	IB	Audited by:		Preliminary Approval:	
Date:	11-2-14	Date:		Date:	

Rev	Date	Change	Revised by	Approved
A	10.04.20	New Issue	KJ	